Wiring Diagram
Mark 2 Battery

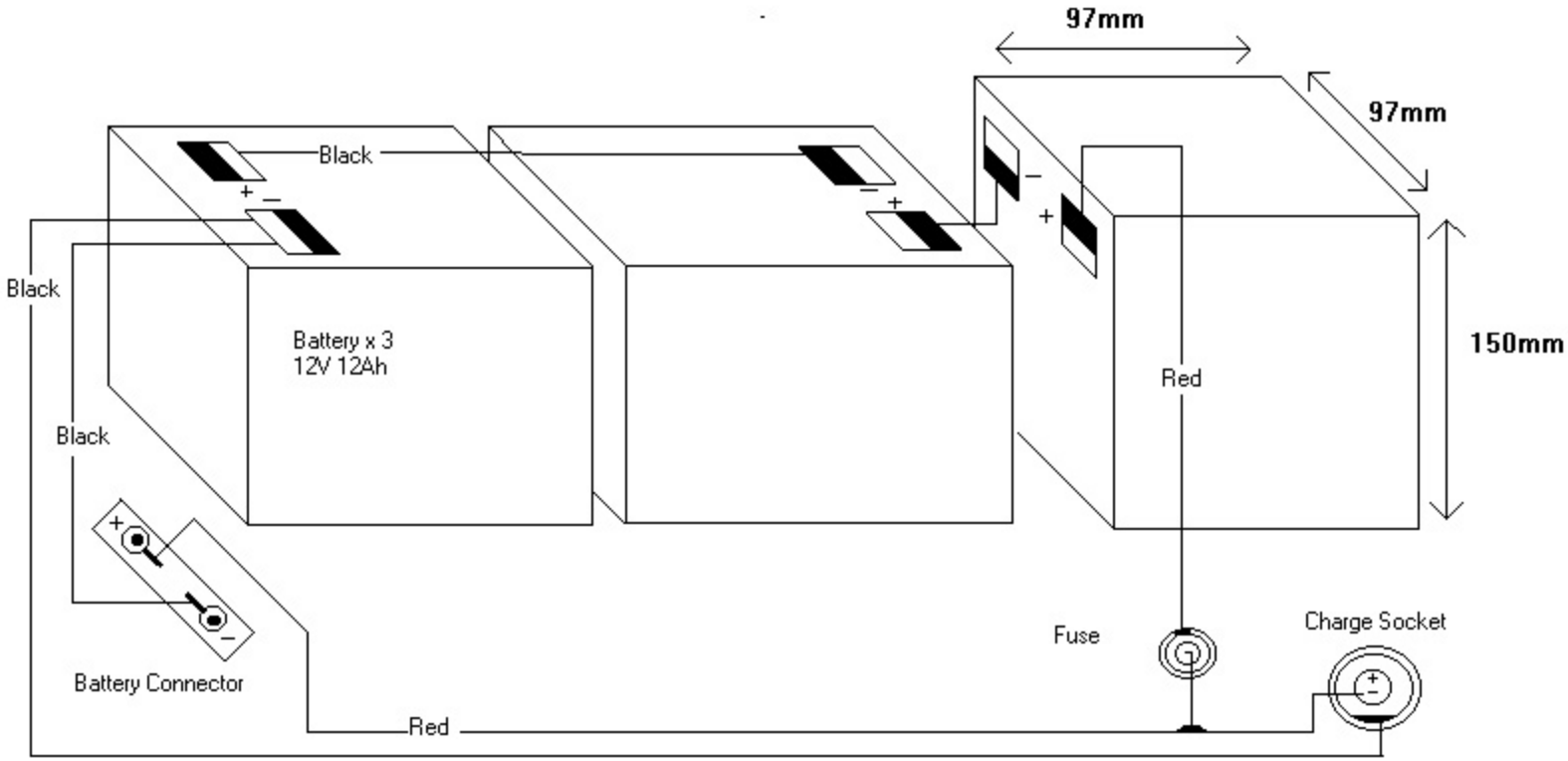

Copyright. Powabyke Ltd, Bath, May 2002